A1

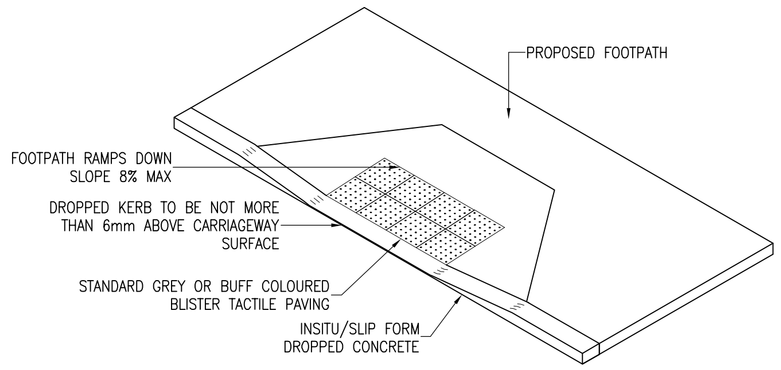

TYPICAL TACTILE PAVING WITH DROPPED KERB DETAIL (UN-CONTROLLED CROSSING)

SCALE 1:50

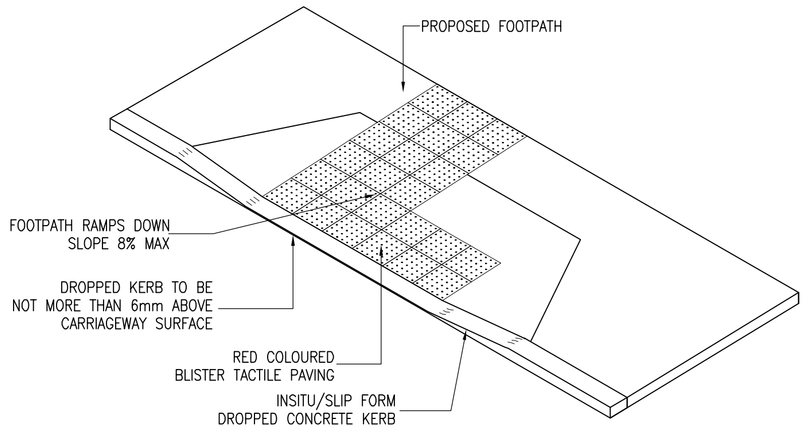

TYPICAL TACTILE PAVING WITH DROPPED KERB DETAIL (CONTROLLED CROSSING)

SCALE 1:50

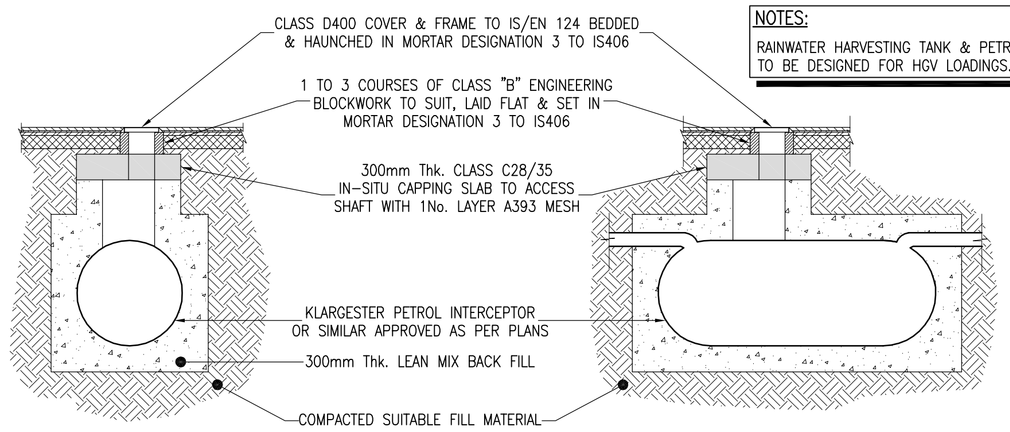

NOTES:

RAINWATER HARVESTING TANK & PETROL INTERCEPTOR TANK TO BE DESIGNED FOR HGV LOADINGS.

TYPICAL PETROL INTERCEPTOR TANK DETAIL

SCALE 1:50

NOTES:

GENERAL NOTES:

1. THIS DRAWING TO BE READ IN CONJUNCTION WITH ALL RELEVANT ARCHITECTS, SERVICE ENGINEERS DRAWINGS & SPECIFICATIONS.
2. ALL LEVELS ARE STRUCTURAL UNLESS NOTED OTHERWISE.
3. ALL WORKS TO BE CARRIED OUT IN ACCORDANCE WITH THE RELEVANT BUILDING REGULATIONS.
4. DO NOT SCALE – WORK TO FIGURE DIMENSIONS ONLY.

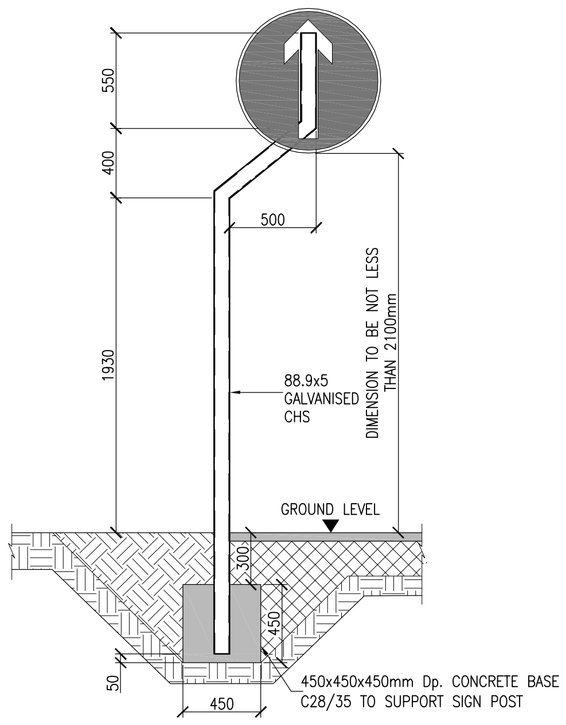

TYPICAL SIGN POST DETAIL

SCALE 1:25

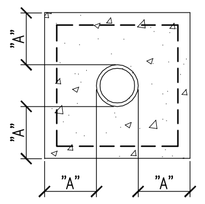

DIM A = 150mm
15N/mm^2 CONCRETE WITH D49 WRAPPING MESH

REQUIRED WHERE COVER TO SEWER PIPES IN GRASSED/LIGHTLY TRAFFICKED AREAS IS LESS THAN 900mm FOR PVC PIPES & 600mm FOR EARTHENWARE PIPES

PROVIDE 12mm VERTICAL MOVEMENT AT MAX INTERVAL OF 5000mm ctrs. IN CONCRETE SURROUND

SEWER WITH INADEQUATE COVER ENCASED IN CONCRETE

SCALE 1:25

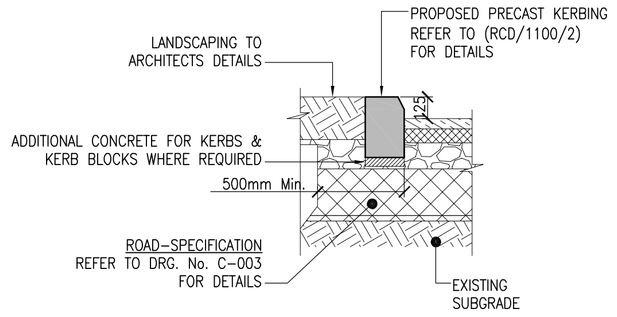

TYP. CARRIAGEWAY EDGE DETAIL 125mm KERB HEIGHT

SCALE 1:25

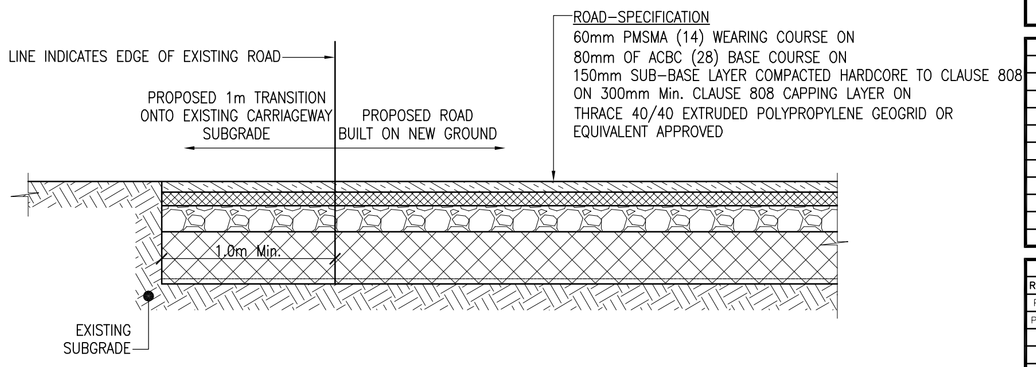

TYP. DETAIL BETWEEN EXISTING & PROPOSED ROAD

SCALE 1:25

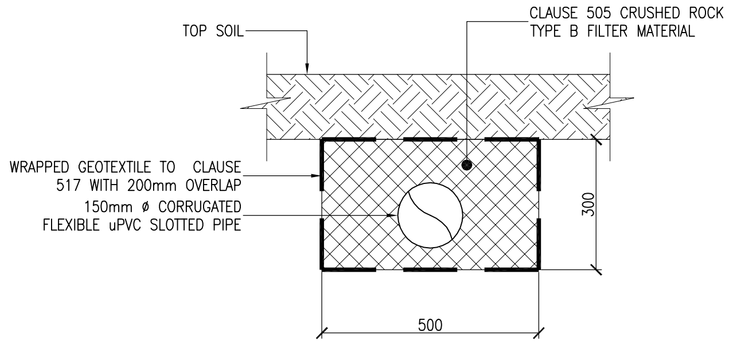

TYPICAL LAND DRAIN DETAIL

SCALE 1:10

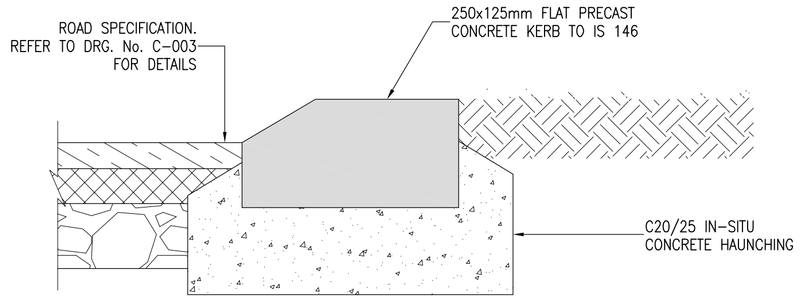

TYPICAL FLAT KERB DETAIL

SCALE 1:10

QUALITY ISO 9001:2000 NSAI Certified

ENGINEERS IRELAND cpd ACCREDITED COMPANY

Referenced drawings	
Dwg No.	Dwg Title

Issue register

Rev.	Date	Description	Dwn.	Chkd.	Appvd.
P1	24.11.17	PROGRESS ISSUE	CZ	PF	NP
PL1	12.01.18	PART 8 ISSUE	PF	PF	NP

Client: KILDARE COUNTY COUNCIL

Job Description: SOCIAL HOUSING UNITS CASTLEFIN SALLINS, Co. KILDARE

Status: PART 8 ISSUE

Drawing Title: EXTERNAL DETAILS

Project No:	Drawing Ref:	Rev:
16KK042	C-054	PL1

Date:	Scale:	
10.10.17	AS SHOWN	
Drawn By:	Checked By:	Approved By:
C.ZUCCO	P.FUNCHEON	N.PATTERSON

Hayes Higgins Partnership
Gas House Lane, Kilkenny.
Gas House Lane, Kilkenny (056) 7764710 (056) 7723223 info@hayeshigginskk.com
58 Fitzwilliam Square, Dublin 2. (01) 6612321 (01) 6625804 admin@hayeshiggins.ie

CADFILE: 16KK042-C-054 External Details.dwg

© HAYES HIGGINS PARTNERSHIP